Nowodvorski LIGHTING

CATALOGUE CARD

LUMINAIRE MODEL	**CHARLIE 8366**
CATALOGUE GROUP	**—**
COUNTRY OF ORIGIN	**MADE IN P.R.C.**

LIGHT SOURCE	**GU10**
LIGHT SOURCES TYPE	**Replaceable**
MAXIMUM WATTAGE	**15W only LED**
LAMP INCLUDES SOURCE OF LIGHT	**No**
NUMBER OF LIGHT SOURCES	**1**
IP	**IP54/20**
	Interior use

PACKAGE DIMENSIONS (L/W/H)	**11cm/11cm/7cm**
NET/GROSS WEIGHT	**0.21kg/0.26kg**
ASSEMBLY METHOD	**Recessed assembly**
LEADING/SUPPLEMENTARY COLOR	**White**
MATERIALS	**Painted aluminum,Glass**
STYLE	**Modern**
ELECTRICAL SECURITY CLASS	**I**
POWER SUPPLY	**~220-230V/50/60Hz**

5 9 0 3 1 3 9 8 3 6 6 9 2



DIMENSIONS

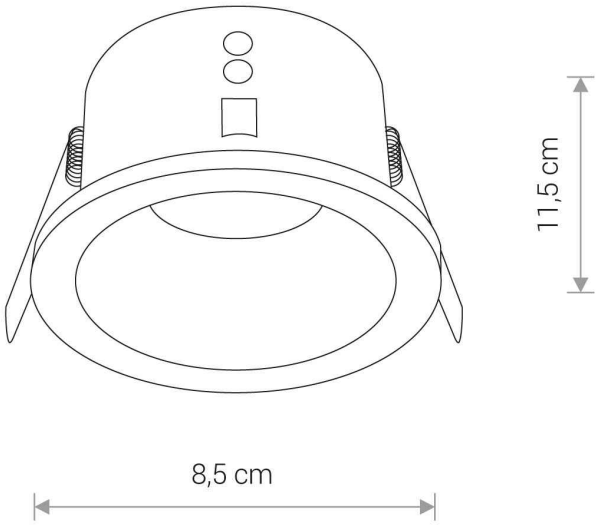

CUT OUT

HOLE SHAPE	**Round**
HOLE DIMENSIONS	**7.5cm**