Nowodvorski LIGHTING

CATALOGUE CARD

LUMINAIRE MODEL	**MONO SURFACE 7835**
CATALOGUE GROUP	**—**
COUNTRY OF ORIGIN	**MADE IN POLAND**

LIGHT SOURCE	**GU10**
LIGHT SOURCES TYPE	**Replaceable**
MAXIMUM WATTAGE	**10W only LED**
LAMP INCLUDES SOURCE OF LIGHT	**No**
NUMBER OF LIGHT SOURCES	**3**
IP	**IP20**
	Interior use





PACKAGE DIMENSIONS (L/W/H)	**73cm/9cm/6.5cm**
NET/GROSS WEIGHT	**1.03kg/1.15kg**
ASSEMBLY METHOD	**Recessed assembly**
LEADING/SUPPLEMENTARY COLOR	**Black**
MATERIALS	**Painted steel,Painted aluminum,Plastic ABS**
STYLE	**Modern**
ELECTRICAL SECURITY CLASS	**I**
POWER SUPPLY	**220-230V/50/60Hz**

DIMENSIONS

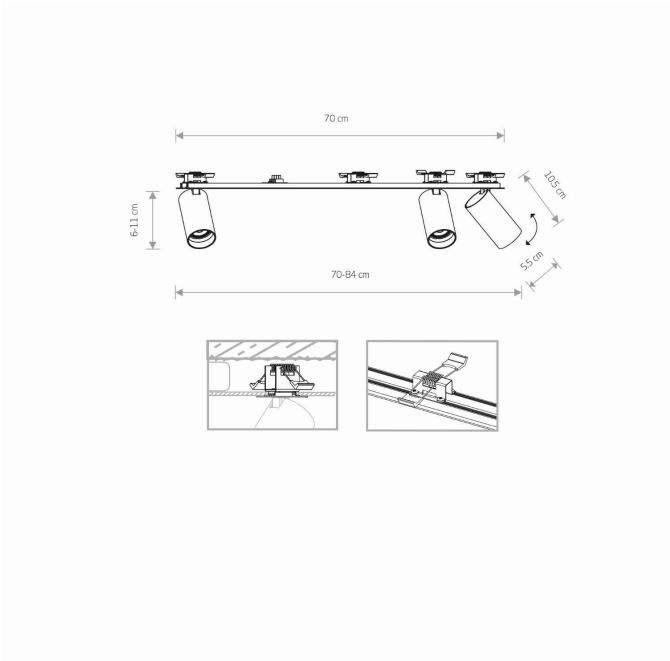

5 9 0 3 1 3 9 7 8 3 5 9 0

Nowodvorski
LIGHTING

CATALOGUE CARD

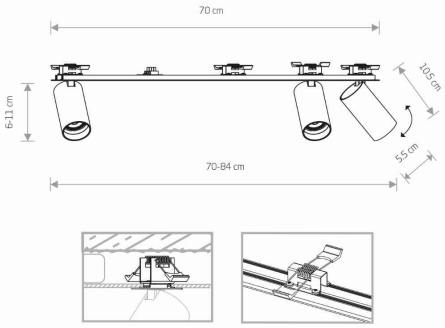

CUT OUT

HOLE SHAPE	**Rectangular**
HOLE DIMENSIONS	**69x3.1cm**