Nowodvorski LIGHTING

CATALOGUE CARD

LUMINAIRE MODEL	**LIA LED 6913**
CATALOGUE GROUP	**—**
COUNTRY OF ORIGIN	**MADE IN P.R.C.**

LIGHT SOURCE	**LED integrated**
LIGHT SOURCES TYPE	**Integrated**
MAXIMUM WATTAGE	**7W**
LAMP INCLUDES SOURCE OF LIGHT	**Yes**
IP	**IP20**
	Interior use
LIFETIME	**10000h**

THIS PRODUCT CONTAINS A LIGHT SOURCE OF ENERGY EFFICIENCY CLASS: G



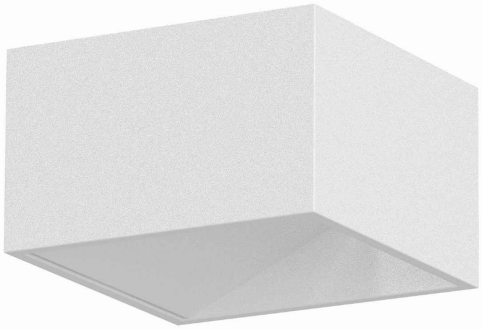

PACKAGE DIMENSIONS (L/W/H)	**11cm/7cm/11cm**
NET/GROSS WEIGHT	**0.436kg/0.468kg**
ASSEMBLY METHOD	**Direct assembly**
LEADING/SUPPLEMENTARY COLOR	**White**
MATERIALS	**Painted aluminum**
STYLE	**Modern**
ELECTRICAL SECURITY CLASS	**I**
POWER SUPPLY	**~220-230V/50/60Hz**

DIMENSIONS

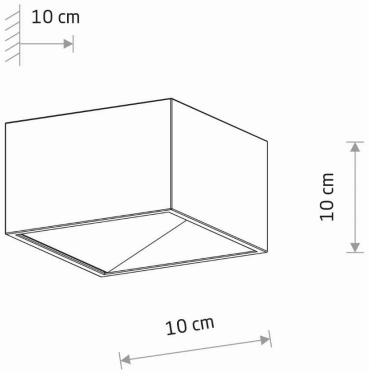

5 9 0 3 1 3 9 6 9 1 3 9 0

Item No.	POWER	COLOR TEMP	LUMEN	BEAM ANGLE	CRI	IP	LED BRAND	DRIVER BRAND	LIFETIME	WARRANTY
6913	7W	3000K	460lm	89°	≥ 80	IP20	—	—	10000h	—