Nowodvorski LIGHTING

CATALOGUE CARD

LUMINAIRE MODEL	**OSLO LED 90 7520**
CATALOGUE GROUP	**—**
COUNTRY OF ORIGIN	**MADE IN POLAND**



LIGHT SOURCE	**LED TUBE T8**
LIGHT SOURCES TYPE	**Replaceable**
MAXIMUM WATTAGE	**16W**
LAMP INCLUDES SOURCE OF LIGHT	**Yes**
NUMBER OF LIGHT SOURCES	**1**
IP	**IP20**
	Interior use
PACKAGE DIMENSIONS (L/W/H)	**105cm/8.5cm/13.5cm**
NET/GROSS WEIGHT	**3.31kg/3.55kg**
ASSEMBLY METHOD	**Bracket + lines**
LEADING/SUPPLEMENTARY COLOR	**Oak,White**
SWITCH	**Yes**
MATERIALS	**Wood,Painted steel**
ELECTRICAL SECURITY CLASS	**I**
POWER SUPPLY	**220-230V/50/60Hz**

5 9 0 3 1 3 9 7 5 2 0 9 1

DIMENSIONS

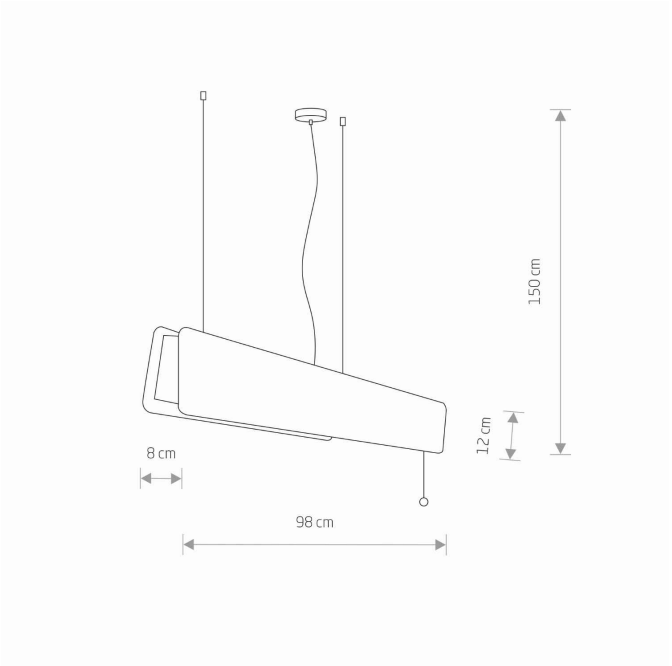

Nowodvorski
LIGHTING

CATALOGUE CARD

