Nowodvorski LIGHTING

CATALOGUE CARD

LUMINAIRE MODEL	**MONO SLIDE TRIMLESS 10802**
CATALOGUE GROUP	**—**
COUNTRY OF ORIGIN	**MADE IN POLAND**

LIGHT SOURCE	**GU10 R50**
LIGHT SOURCES TYPE	**Replaceable**
MAXIMUM WATTAGE	**10W only LED**
LAMP INCLUDES SOURCE OF LIGHT	**No**
NUMBER OF LIGHT SOURCES	**1**
IP	**IP20**
	Interior use



PACKAGE DIMENSIONS (L/W/H)	**10cm/10cm/11cm**
NET/GROSS WEIGHT	**0.25kg/0.31kg**
ASSEMBLY METHOD	**Recessed assembly**
LEADING/SUPPLEMENTARY COLOR	**White**
MATERIALS	**Painted steel,Plastic PA,Plastic ABS**
STYLE	**Modern**
ELECTRICAL SECURITY CLASS	**II**
POWER SUPPLY	**220-230V/50/60Hz**

5 9 0 3 1 3 9 1 0 8 0 2 7



DIMENSIONS

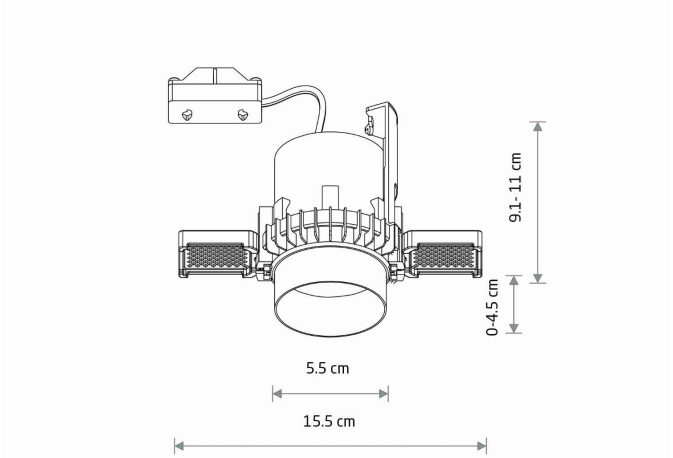

CUT OUT

HOLE SHAPE	**Round**
HOLE DIMENSIONS	**7.6cm**