Nowodvorski LIGHTING

CATALOGUE CARD

LUMINAIRE MODEL	**CEZANNE LED L 10678**
CATALOGUE GROUP	**—**
COUNTRY OF ORIGIN	**MADE IN P.R.C.**

LIGHT SOURCE	**LED**
LIGHT SOURCES TYPE	**Integrated**
MAXIMUM WATTAGE	**15W**
LAMP INCLUDES SOURCE OF LIGHT	**Yes**
IP	**IP44**
	Interior use
LIFETIME	**25000h**

THIS PRODUCT 10678 CONTAINS A LIGHT SOURCE 11046 OF ENERGY EFFICIENCY CLASS: F





PACKAGE DIMENSIONS (L/W/H)	**81.5cm/12cm/5.2cm**
NET/GROSS WEIGHT	**0.4kg/0.595kg**
ASSEMBLY METHOD	**Direct assembly**
LEADING/SUPPLEMENTARY COLOR	**Black**
MATERIALS	**Painted aluminum,Plastic ABS,Plastic PMMA**
STYLE	**Modern**
ELECTRICAL SECURITY CLASS	**II**
POWER SUPPLY	**~220-230V/50/60Hz**

5 9 0 3 1 3 9 1 0 6 7 8 8

DIMENSIONS

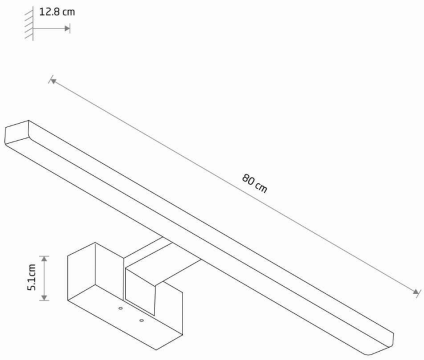

Item No.	POWER	COLOR TEMP	LUMEN	BEAM ANGLE	CRI	IP	LED BRAND	DRIVER BRAND	LIFETIME	WARRANTY
10678	15W	4000K	1100lm	120°	≥ 80	IP44	—	—	25000h	—